Technical Data Sheet

Compressor model **GPY16RDa**

Voltage **115V 60Hz ~1**

Refrigerant **R134a**

APPLICATION

Application	High Back Pressure
Refrigerant	R134a
Evaporating Temp.	-15,0 ºC to 10,0 ºC
Expansion	Capillar/Valve
Comp. Cooling	Fan cooled
Max. ambient temp.	43,0 ºC
Compatible refriger.	R1234yf

COMPRESSOR

Displacement	16,15 cm³
Diameter	31,19 mm
Stroke	21,13 mm
Net Weight	12,05 Kg
Oil type	ISO VG 32 ESTER
Oil charge	400 cm³

MOTOR

Nominal Power	1/2 hp
Voltage/Frequency	115V 60Hz
Voltage range	98-132 V
Type	CSIR
Phase number	1 PH
Locked Rotor Amps (LRA)	46,00 A
Max. Cont. Current (MCC)	12,50 A
Main W. resist. at 25ºC	0,89 Ω
Start W. resist. at 25ºC	4,55 Ω

NOMINAL PERFORMANCE

	ASHRAE	CECOMAF
Cooling Capacity	1.560 kCal/h	1.518 W
COP	2,17 W/W	1,88 W/W
EER	1,87 kCal/Wh	1,62 kCal/Wh
Input Power	836 W	809 W
Current	9,35 A	9,13 A

APPROVALS

TEST CYCLE CONDITIONS

	ASHRAE	**CECOMAF**
	HBP (D)	**HBP (C)**
Evaporating temp. (T_e)	7,2 ºC	5,0 ºC
Condensing temp. (T_c)	55,0 ºC	55,0 ºC
Liquid temp. ($T_{liq.}$)	46,0 ºC	55,0 ºC
Ambient temp. ($T_{amb.}$)	35,0 ºC	32,0 ºC
Suction temp. ($T_{suction}$)	35,0 ºC	32,0 ºC
Voltage/Frequency	115 V 60 Hz	115 V 60 Hz

ELECTRICAL COMPONENTS

Starting capacitor	250 µF 160 V			
Relay	Option 1			
Reference	2014 191.			
Pick-Up	24,40 A			
Drop-Out	20,30 A			
Protector	Option 1	Option 2		
Reference	MRA38142	T0257		
Current	24,00 A	24,00 A		
Time check	7,5-14 seg	6,0-16 seg		
Disc temp. (Open/Close)	120,00 / 52,00 ºC	120,00 / 52,00 ºC		

Technical Data Sheet

ENGINEERING TOMORROW

ASHRAE

Tc °C	Te °C	Cooling Capacity kCal/h	Consumption W	Current A	COP W/W	EER kCal/Wh
40	-15	716	502	7,06	1,66	1,43
40	-10	914	559	7,38	1,90	1,63
40	-5	1.141	618	7,74	2,15	1,85
40	0	1.398	679	8,14	2,39	2,06
40	5	1.684	742	8,60	2,64	2,27
40	7,2	1.820	770	8,81	2,75	2,36
40	10	2.001	806	9,10	2,89	2,48
45	-15	671	512	7,12	1,52	1,31
45	-10	859	572	7,45	1,75	1,50
45	-5	1.077	633	7,83	1,98	1,70
45	0	1.325	697	8,27	2,21	1,90
45	5	1.602	763	8,75	2,44	2,10
45	7,2	1.733	792	8,99	2,55	2,19
45	10	1.909	830	9,30	2,67	2,30
50	-15	625	521	7,17	1,40	1,20
50	-10	804	584	7,53	1,60	1,38
50	-5	1.013	649	7,93	1,82	1,56
50	0	1.251	715	8,40	2,04	1,75
50	5	1.519	783	8,92	2,26	1,94
50	7,2	1.647	814	9,17	2,35	2,02
50	10	1.817	854	9,50	2,48	2,13
55	-15	580	531	7,22	1,27	1,09
55	-10	750	596	7,60	1,46	1,26
55	-5	949	664	8,04	1,66	1,43
55	0	1.178	733	8,53	1,87	1,61
55	5	1.437	804	9,09	2,08	1,79
55	7,2	1.560	836	9,35	2,17	1,87
55	10	1.725	877	9,71	2,29	1,97
60	-15	535	541	7,27	1,15	0,99
60	-10	695	609	7,68	1,33	1,14
60	-5	885	679	8,14	1,52	1,30
60	0	1.105	751	8,67	1,71	1,47
60	5	1.354	825	9,26	1,91	1,64
60	7,2	1.473	858	9,54	2,00	1,72
60	10	1.633	901	9,92	2,11	1,81
65	-15	489	550	7,33	1,03	0,89
65	-10	640	621	7,76	1,20	1,03
65	-5	821	694	8,25	1,38	1,18
65	0	1.031	769	8,80	1,56	1,34
65	5	1.272	846	9,43	1,75	1,50
65	7,2	1.387	880	9,73	1,83	1,58
65	10	1.541	924	10,13	1,94	1,67

CECOMAF

Tc °C	Te °C	Cooling Capacity W	Consumption W	Current A	COP W/W	EER kCal/Wh
40	-15	771	505	7,08	1,53	1,32
40	-10	985	562	7,40	1,75	1,51
40	-5	1.230	622	7,76	1,98	1,71
40	0	1.506	683	8,17	2,21	1,91
40	5	1.814	746	8,63	2,43	2,10
40	7,2	1.959	775	8,85	2,53	2,18
40	10	2.152	812	9,15	2,65	2,29
45	-15	719	514	7,13	1,40	1,21
45	-10	921	575	7,47	1,60	1,38
45	-5	1.154	637	7,86	1,81	1,57
45	0	1.419	701	8,30	2,02	1,75
45	5	1.715	767	8,79	2,23	1,93
45	7,2	1.855	797	9,03	2,33	2,01
45	10	2.042	835	9,35	2,44	2,11
50	-15	666	524	7,18	1,27	1,10
50	-10	857	587	7,55	1,46	1,26
50	-5	1.079	652	7,96	1,65	1,43
50	0	1.332	719	8,43	1,85	1,60
50	5	1.616	788	8,96	2,05	1,77
50	7,2	1.751	819	9,21	2,14	1,85
50	10	1.932	859	9,55	2,25	1,94
55	-15	614	534	7,24	1,15	0,99
55	-10	793	600	7,62	1,32	1,14
55	-5	1.003	668	8,06	1,50	1,30
55	0	1.245	737	8,56	1,69	1,46
55	5	1.518	809	9,13	1,88	1,62
55	7,2	1.648	841	9,40	1,96	1,69
55	10	1.822	883	9,76	2,06	1,78
60	-15	561	544	7,29	1,03	0,89
60	-10	729	612	7,70	1,19	1,03
60	-5	928	683	8,17	1,36	1,17
60	0	1.158	756	8,70	1,53	1,32
60	5	1.419	830	9,30	1,71	1,48
60	7,2	1.544	864	9,59	1,79	1,54
60	10	1.712	907	9,97	1,89	1,63
65	-15	508	553	7,35	0,92	0,79
65	-10	665	625	7,78	1,06	0,92
65	-5	852	698	8,28	1,22	1,05
65	0	1.071	774	8,84	1,38	1,20
65	5	1.321	851	9,48	1,55	1,34
65	7,2	1.440	886	9,78	1,63	1,41
65	10	1.601	930	10,19	1,72	1,49

EN12900

X	Cooling Capacity (W)	Consumption (W)	Current (A)	Mass Flow (kg/h)
1	2.210,4991789595	551,9159265686	7,0903161170	36,394967637284
2	77,4313958593	8,3677910529	0,0462238258	1,346478443064
3	-18,1135073280	3,7212424452	0,0294250558	-0,081262013667806
4	0,6159798862	0,0469404530	0,0013590023	0,018941898266971
5	-0,4923793654	0,1154626390	0,0012306719	0,00070079448823364

Equation	$x_1 + x_2Te + x_3Tc + x_4Te^2 + x_5TeTc$

Technical Data Sheet

COMPRESSOR DIMENSIONS

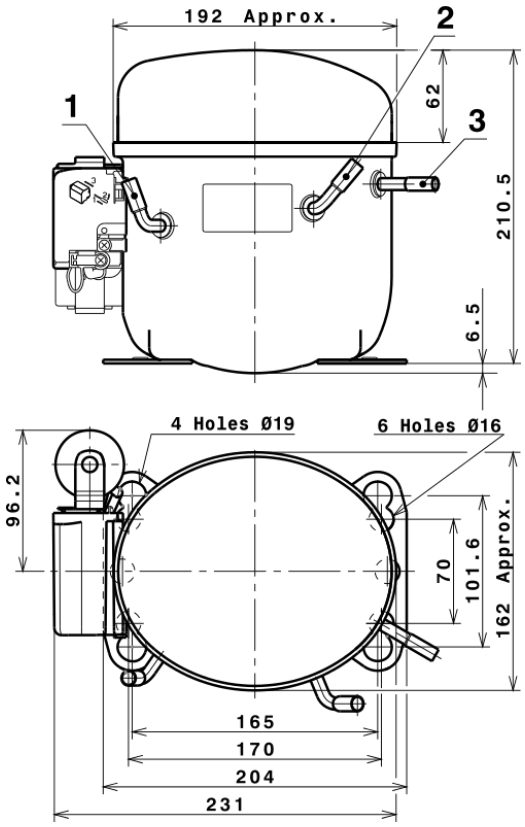

	DESIGNATION	INTERNAL DIAM.
1	Suction	8,1 mm
2	Service	8,1 mm
3	Discharge	6,5 mm

WIRING DIAGRAMS AND ELECTRICAL ASSEMBLY

CSIR CONNECTION (L, P ranges)

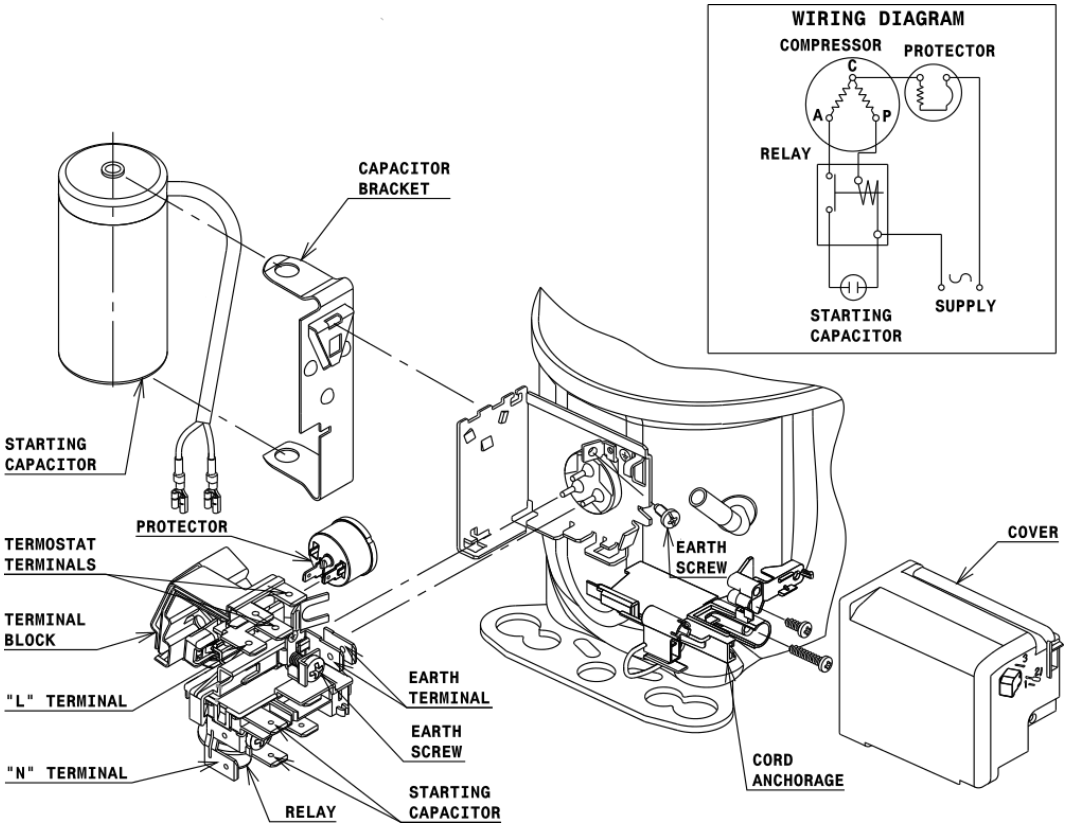

Technical Data Sheet

FIXINGS

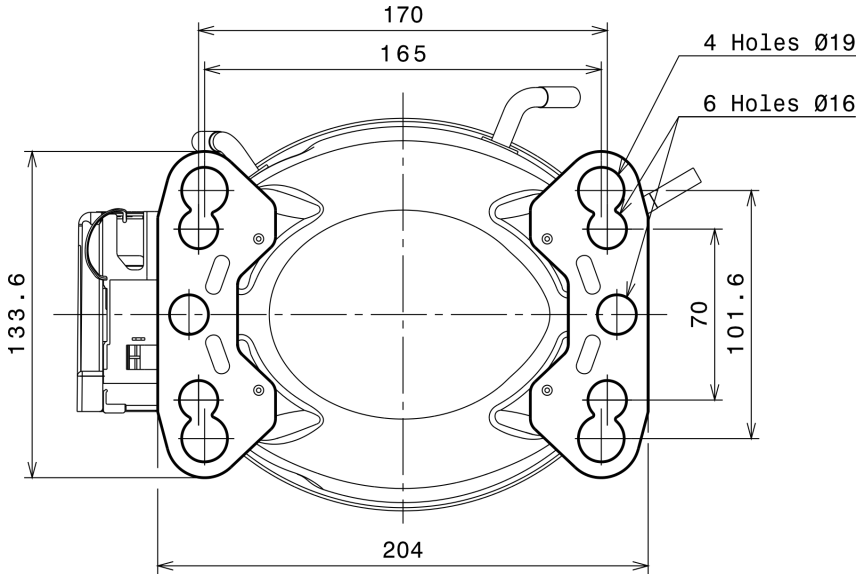

SILENT BLOCKS (MOUNTING ACCESSORIES)

STANDARD

Ø16 holes (170x70 net)

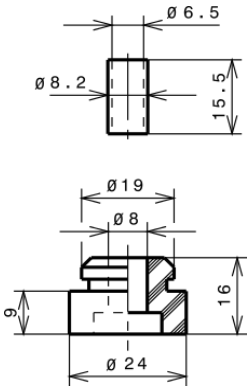

AMERICAN FEET

Ø19 holes (165x101.6 net)

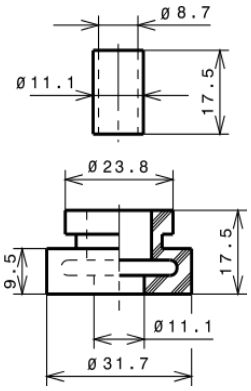

SNAP-ON

Ø16 holes (170x70 net)

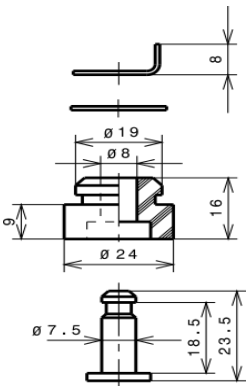

SOA
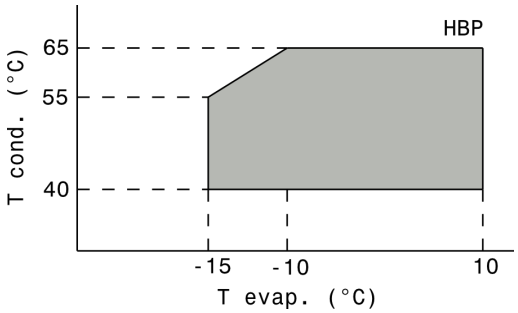
SOA R134a HBP